038.0	0001	0002.0	1 of 6	Apartment
Map	Block	Lot	CARD	ARLINGTON

	Total Card /	Total Parcel
APPRAISED:	8,715,300 /	17,372,400
USE VALUE:	8,715,300 /	17,372,400
ASSESSED:	8,715,300 /	17,372,400

PROPERTY LOCATION

No	Alt No	Direction/Street/City
127	-133	BROADWAY, ARLINGTON

OWNERSHIP

Unit #:

Owner 1:	CONSERVATION FOOD & HEALTH
Owner 2:	FOUNDATION INC
Owner 3:	
Street 1:	466B TRAPELO ROAD
Street 2:	
Twn/City:	BELMONT
St/Prov:	MA Cntry: Own Occ: N
Postal:	02478 Type:

PREVIOUS OWNER

Owner 1:	
Owner 2:	
Street 1:	
Twn/City:	
St/Prov:	Cntry:
Postal:	

NARRATIVE DESCRIPTION

This parcel contains 230,580 Sq. Ft. of land mainly classified as Apts. 8 Plus with a Apt- Garden Building built about 1955, having primarily Brick Exterior and 14562 Square Feet, with 18 Units, 18 Baths, 0 3/4 Bath, 0 HalfBath, 63 Rooms, and 27 Bdrms.

OTHER ASSESSMENTS

Code	Descrip/No	Amount	Com. Int

PROPERTY FACTORS

Item	Code	Description	%	Item	Code	Description
Z	R5	APTS LOW	100	water		
o				Sewer		
n				Electri		
Census:				Exmpt		
Flood Haz:						
D				Topo		
s				Street		
t				Gas:		

IN PROCESS APPRAISAL SUMMARY

Use Code	Land Size	Building Value	Yard Items	Land Value	Total Value
112	230580.000	1,652,600	44,700	7,018,000	8,715,300
Total Card	5.293	1,652,600	44,700	7,018,000	8,715,300
Total Parcel	5.293	10,309,700	44,700	7,018,000	17,372,400

Source: Market Adj Cost | Total Value per SQ unit /Card: 598.50 | /Parcel: 207.0

Legal Description

Entered Lot Size	
Total Land:	
Land Unit Type:	

User Acct	25289
GIS Ref	
GIS Ref	
Insp Date	11/07/18

Patriot Properties Inc.

PREVIOUS ASSESSMENT

Parcel ID 038.0-0001-0002.0

!3149!

Tax Yr	Use	Cat	Bldg Value	Yrd Items	Land Size	Land Value	Total Value	Asses'd Value	Notes	Date
2020	112	FV	9,856,400	44700	230,580.	6,380,000	16,281,100	16,281,100	Year End Roll	12/18/2019
2019	112	FV	8,171,300	46800	230,580.	6,380,000	14,598,100	14,598,100	Year End Roll	1/3/2019
2018	112	FV	8,171,300	46800	230,580.	6,380,000	14,598,100	14,598,100	Year End Roll	12/20/2017
2017	112	FV	7,048,000	46800	230,580.	5,220,000	12,314,800	12,314,800	Year End Roll	1/3/2017
2016	112	FV	7,048,000	46800	230,580.	5,220,000	12,314,800	12,314,800	Year End	1/4/2016
2015	112	FV	6,205,400	48400	230,580.	4,408,000	10,661,800	10,661,800	Year End Roll	12/11/2014
2014	112	FV	6,205,400	48400	230,580.	4,408,000	10,661,800	10,661,800	Year End Roll	12/16/2013
2013	112	FV	6,205,400	48400	230,580.	4,408,000	10,661,800	10,661,800		12/13/2012

PRINT

Date	Time
12/10/20	18:27:30

LAST REV

Date	Time
04/02/19	14:56:51
apro	

USER DEFINED

Prior Id # 1:	25289
Prior Id # 2:	
Prior Id # 3:	
Prior Id # 1:	
Prior Id # 2:	
Prior Id # 3:	
Prior Id # 1:	
Prior Id # 2:	
Prior Id # 3:	
ASR Map:	
Fact Dist:	
Reval Dist:	
Year:	
LandReason:	
BldReason:	
CivilDistrict:	
Ratio:	

SALES INFORMATION

TAX DISTRICT

PAT ACCT. 3149

Grantor	Legal Ref	Type	Date	Sale Code	Sale Price	V	Tst	Verif	Notes
	11702-389		7/1/1969		1,334	No	No		N

BUILDING PERMITS

Date	Number	Descrip	Amount	C/O	Last Visit	Fed Code	F. Descrip	Comment
11/3/2015	1691	Alterati	5,800					
6/7/2011	556	Manual	1,000					BASE FOOTING / 2 L
7/25/2002	587	Redo Kit	3,125	C				NEW CABINETS-COUNT
8/4/1992	354	New Wind	7,500					NEW WINDOWS

ACTIVITY INFORMATION

Date	Result	By	Name
11/7/2018	Meas/Inspect	HS	Hanne S
2/23/2009	Measured	197	PATRIOT
4/19/2000	Info At Door	197	PATRIOT
10/21/1998		PM	Peter M

Sign: VERIFICATION OF VISIT NOT DATA ___/___/___

LAND SECTION (First 7 lines only)

Use Code	Description	LUC Fact	No of Units	Depth / PriceUnits	Unit Type	Land Type	LT Factor	Base Value	Unit Price	Adj	Neigh	Neigh Influ	Neigh Mod	Infl 1	%	Infl 2	%	Infl 3	%	Appraised Value	Alt Class	%	Spec Land	J Code	Fact	Use Value	Notes
112	Apts. 8 Plus		230580		Sq. Ft.	Site		0	0.	0.00	AA																
112	Apts. 8 Plus		116		No. of Un	Site		0	60,500.	1.00	AA									7,018,000						7,018,000	

Total AC/HA: 5.29339 | Total SF/SM: 230580 | Parcel LUC: 112 | Apts. 8 Plus | Prime NB Desc: APT AVG | Total: 7,018,000 | Spl Credit | Total: 7,018,000

Sample output to test PDF Combine only

EXTERIOR INFORMATION

Type:	83 - Apt- Garden		
Sty Ht:	2 - 2 Story		
(Liv) Units:	18	Total:	116
Foundation:	1 - Concrete		
Frame:	1 - Wood		
Prime Wall:	7 - Brick		
Sec Wall:			%
Roof Struct:	2 - Hip		
Roof Cover:	1 - Asphalt Shgl		
Color:			
View / Desir:			

BATH FEATURES

Full Bath	18	Rating:	Average
A Bath:		Rating:	
3/4 Bath:		Rating:	
A 3QBth		Rating:	
1/2 Bath:		Rating:	
A HBth:		Rating:	
OthrFix:		Rating:	

OTHER FEATURES

Kits:	18	Rating:	Average
A Kits:		Rating:	
Frpl:		Rating:	
WSFlue:		Rating:	

COMMENTS

RESIDENTIAL GRID

1st Res Grid	Desc:	Line 1	# Units:	9

Level	FY	LR	DR	D	K	FR	RR	BR	FB	HB	L	O
Other												
Upper												
Lvl 2												
Lvl 1												
Lower												
Totals	RMs:	63	BRs:	27	Baths:	18	HB					

SKETCH

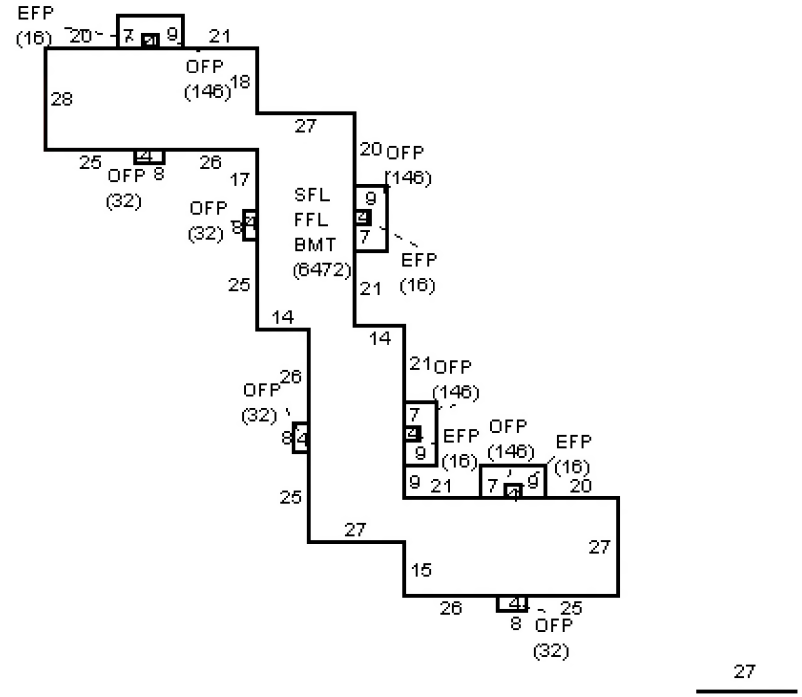

GENERAL INFORMATION

Grade:	C - Average		
Year Blt:	1955	Eff Yr Blt:	
Alt LUC:		Alt %:	
Jurisdict:	G12	Fact:	.
Const Mod:			
Lump Sum Adj:			

CONDO INFORMATION

Location:	
Total Units:	
Floor:	
% Own:	
Name:	

REMODELING

Exterior:	
Interior:	
Additions:	
Kitchen:	
Baths:	
Plumbing:	
Electric:	
Heating:	
General:	

RES BREAKDOWN

No Unit	RMS	BRS	FL
9	4	2	M
9	3	1	M
Totals			
18	63	27	

INTERIOR INFORMATION

Avg Ht/FL:	STD		
Prim Int Wall	1 - Drywall		
Sec Int Wall:			%
Partition:	T - Typical		
Prim Floors:	4 - Carpet		
Sec Floors:			%
Bsmnt Flr:	12 - Concrete		
Subfloor:			
Bsmnt Gar:			
Electric:	3 - Typical		
Insulation:	2 - Typical		
Int vs Ext:	S		
Heat Fuel:	1 - Oil		
Heat Type:	1 - Forced H/Air		
# Heat Sys:	1		
% Heated:	100	% AC:	
Solar HW:	NO	Central Vac:	NO
% Com Wall		% Sprinkled:	0

DEPRECIATION

Phys Cond:	AV - Average	30.	%
Functional:			%
Economic:			%
Special:			%
Override:			%
	Total:	30	%

CALC SUMMARY

Basic $ / SQ:	168.00
Size Adj.:	0.80000001
Const Adj.:	1.04989493
Adj $ / SQ:	141.106
Other Features:	180000
Grade Factor:	1.00
NBHD Inf:	1.00000000
NBHD Mod:	
LUC Factor:	1.00
Adj Total:	2360844
Depreciation:	708253
Depreciated Total:	1652591

COMPARABLE SALES

Rate	Parcel ID	Typ	Date	Sale Price

WtAv$/SQ:		AvRate:		Ind.Val	

Juris. Factor:	1.00	Before Depr:	141.11
Special Features:	0	Val/Su Net:	81.84
Final Total:	1652600	Val/Su SzAd	127.67

SUB AREA

Code	Description	Area - SQ	Rate - AV	Undepr Value
BMT	Basement	6,472	51.860	335,615
FFL	First Floor	6,472	141.110	913,237
SFL	Second Floor	6,472	141.110	913,237
OFP	Open Porch	712	19.760	14,066
EFP	Enclos Porch	64	73.240	4,688

Net Sketched Area:	20,192			Total:	2,180,843
Size Ad	12944	Gross Are	20192	FinArea	14562

SUB AREA DETAIL

Sub Area	% Usbl	Descrip	% Type	Qu	# Ten
BMT	100	FLA	25	A	

MOBILE HOME

Make:		Model:		Serial #:		Year:		Color:	

PARCEL ID

038.0-0001-0002.0

SPEC FEATURES/YARD ITEMS

Code	Description	A	Y/S	Qty	Size/Dim	Qual	Con	Year	Unit Price	D/S	Dep	LUC	Fact	NB Fa	Appr Value	JCod	JFact	Juris. Value
85	Paving	D	Y	1	40000	A	AV	1980	1.63	T	31.2	112			44,700			44,700

Sample output to test PDF Combine only

More:	N	Total Yard Items:	44,700	Total Special Featues:	Total: 44,700

IMAGE

AssessPro Patriot Properties, Inc

038.0	0001	0002.0	2 of 6	Apartment
Map	Block	Lot	CARD	ARLINGTON

	Total Card /	Total Parcel
APPRAISED:	1,305,700 /	17,372,400
USE VALUE:	1,305,700 /	17,372,400
ASSESSED:	1,305,700 /	17,372,400

PROPERTY LOCATION

No	Alt No	Direction/Street/City
127	-133	BROADWAY, ARLINGTON

OWNERSHIP

Unit #:

Owner 1:	CONSERVATION FOOD & HEALTH
Owner 2:	FOUNDATION INC
Owner 3:	
Street 1:	466B TRAPELO ROAD
Street 2:	
Twn/City:	BELMONT
St/Prov:	MA Cntry: Own Occ: N
Postal:	02478 Type:

PREVIOUS OWNER

Owner 1:	
Owner 2:	
Street 1:	
Twn/City:	
St/Prov:	Cntry:
Postal:	

NARRATIVE DESCRIPTION

This parcel contains 230,580 Sq. Ft. of land mainly classified as Apts. 8 Plus with a Apt- Garden Building built about 1955, having primarily Brick Exterior and 10338 Square Feet, with 14 Units, 14 Baths, 0 3/4 Bath, 0 HalfBath, 49 Rooms, and 21 Bdrms.

OTHER ASSESSMENTS

Code	Descrip/No	Amount	Com. Int

PROPERTY FACTORS

Item	Code	Description	%	Item	Code	Description
Z	R5	APTS LOW	100	water		
o				Sewer		
n				Electri		
Census:				Exmpt		
Flood Haz:						
D				Topo		
s				Street		
t				Gas:		

IN PROCESS APPRAISAL SUMMARY

Use Code	Land Size	Building Value	Yard Items	Land Value	Total Value
112	0.000	1,305,700			1,305,700
Total Card	0.000	1,305,700			1,305,700
Total Parcel	5.293	10,309,700	44,700	7,018,000	17,372,400

Source: Market Adj Cost | Total Value per SQ unit /Card: 126.31 | /Parcel: 207.0

Legal Description

User Acct
25289
GIS Ref
GIS Ref
Insp Date
02/24/09

Entered Lot Size	
Total Land:	
Land Unit Type:	

PREVIOUS ASSESSMENT

Parcel ID 038.0-0001-0002.0

Tax Yr	Use	Cat	Bldg Value	Yrd Items	Land Size	Land Value	Total Value	Asses'd Value	Notes	Date

!3149!

PRINT

Date	Time
12/10/20	18:27:33

LAST REV

Date	Time
11/30/18	13:57:15
apro	

SALES INFORMATION

TAX DISTRICT

PAT ACCT. 3149

Grantor	Legal Ref	Type	Date	Sale Code	Sale Price	V	Tst	Verif	Notes

USER DEFINED

Prior Id # 1:	25289
Prior Id # 2:	
Prior Id # 3:	
Prior Id # 1:	
Prior Id # 2:	
Prior Id # 3:	
Prior Id # 1:	
Prior Id # 2:	
Prior Id # 3:	
ASR Map:	
Fact Dist:	
Reval Dist:	
Year:	
LandReason:	
BldReason:	
CivilDistrict:	
Ratio:	

BUILDING PERMITS

Date	Number	Descrip	Amount	C/O	Last Visit	Fed Code	F. Descrip	Comment
4/7/2010	274	Manual	5,000					WALL REPAIRS #131

ACTIVITY INFORMATION

Date	Result	By	Name
2/24/2009	Measured	197	PATRIOT
4/19/2000	Info At Door	197	PATRIOT

Sign: VERIFICATION OF VISIT NOT DATA ___/___/___

LAND SECTION (First 7 lines only)

Use Code	Description	LUC Fact	No of Units	Depth / PriceUnits	Unit Type	Land Type	LT Factor	Base Value	Unit Price	Adj	Neigh	Neigh Influ	Neigh Mod	Infl 1	%	Infl 2	%	Infl 3	%	Appraised Value	Alt Class	%	Spec Land	J Code	Fact	Use Value	Notes
112	Apts. 8 Plus		0		Sq. Ft.	Site		0	0.	0.00	AA																

Total AC/HA: 0.00000 | Total SF/SM: 0 | Parcel LUC: 112 | Apts. 8 Plus | Prime NB Desc: APT AVG | Total: | Spl Credit | Total:

Sample output to test PDF Combine only

EXTERIOR INFORMATION

Type:	83 - Apt- Garden		
Sty Ht:	2 - 2 Story		
(Liv) Units:	14	Total:	116
Foundation:	1 - Concrete		
Frame:	1 - Wood		
Prime Wall:	7 - Brick		
Sec Wall:	2 - Clapboard	10	%
Roof Struct:	2 - Hip		
Roof Cover:	1 - Asphalt Shgl		
Color:	BRICK		
View / Desir:			

GENERAL INFORMATION

Grade:	C - Average		
Year Blt:	1955	Eff Yr Blt:	
Alt LUC:		Alt %:	
Jurisdict:		Fact:	.
Const Mod:			
Lump Sum Adj:			

INTERIOR INFORMATION

Avg Ht/FL:	STD		
Prim Int Wall	2 - Plaster		
Sec Int Wall:			%
Partition:	T - Typical		
Prim Floors:	4 - Carpet		
Sec Floors:			%
Bsmnt Flr:	12 - Concrete		
Subfloor:			
Bsmnt Gar:			
Electric:	3 - Typical		
Insulation:	2 - Typical		
Int vs Ext:	S		
Heat Fuel:	1 - Oil		
Heat Type:	3 - Forced H/W		
# Heat Sys:	1		
% Heated:	100	% AC:	
Solar HW:	NO	Central Vac:	NO
% Com Wall		% Sprinkled:	

BATH FEATURES

Full Bath	14	Rating:	Average
A Bath:		Rating:	
3/4 Bath:		Rating:	
A 3QBth		Rating:	
1/2 Bath:		Rating:	
A HBth:		Rating:	
OthrFix:		Rating:	

OTHER FEATURES

Kits:	14	Rating:	Average
A Kits:		Rating:	
Frpl:		Rating:	
WSFlue:		Rating:	

CONDO INFORMATION

Location:	
Total Units:	
Floor:	
% Own:	
Name:	

DEPRECIATION

Phys Cond:	AV - Average	30.	%
Functional:			%
Economic:			%
Special:			%
Override:			%
	Total:	30	%

CALC SUMMARY

Basic $ / SQ:	168.00
Size Adj.:	0.92623323
Const Adj.:	1.04489541
Adj $ / SQ:	162.593
Other Features:	140000
Grade Factor:	1.00
NBHD Inf:	1.00000000
NBHD Mod:	
LUC Factor:	1.00
Adj Total:	1865357
Depreciation:	559607
Depreciated Total:	1305750

COMMENTS

5,7,+ 9.

RESIDENTIAL GRID

1st Res Grid	Desc:	Line 1	# Units:	7

Level	FY	LR	DR	D	K	FR	RR	BR	FB	HB	L	O
Other												
Upper												
Lvl 2												
Lvl 1												
Lower												
Totals	RMs:	49	BRs:	21	Baths:	14	HB					

REMODELING

Exterior:	
Interior:	
Additions:	
Kitchen:	
Baths:	
Plumbing:	
Electric:	
Heating:	
General:	

RES BREAKDOWN

No Unit	RMS	BRS	FL
7	4	2	M
7	3	1	M
Totals			
14	49	21	

COMPARABLE SALES

Rate	Parcel ID	Typ	Date	Sale Price

WtAv$/SQ:		AvRate:	Ind.Val

Juris. Factor:	1.00	Before Depr:	162.59
Special Features:	0	Val/Su Net:	94.76
Final Total:	1305700	Val/Su SzAd	148.41

SKETCH

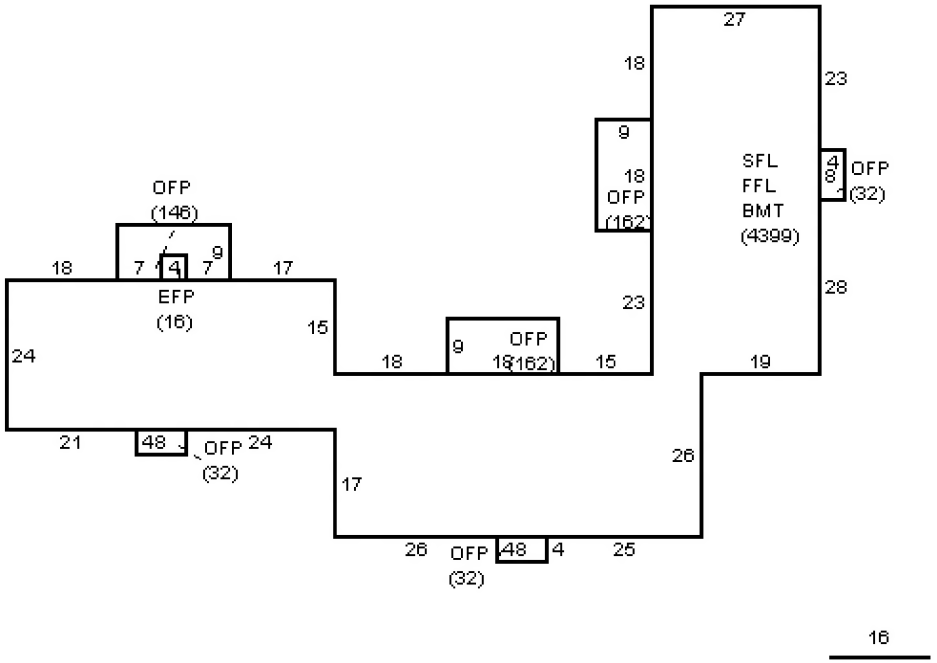

SUB AREA

Code	Description	Area - SQ	Rate - AV	Undepr Value
BMT	Basement	4,399	64.140	282,165
FFL	First Floor	4,399	162.590	715,248
SFL	Second Floor	4,399	162.590	715,248
OFP	Open Porch	566	20.290	11,482
EFP	Enclos Porch	16	75.860	1,214

Net Sketched Area:	13,779			Total:	1,725,357
Size Ad	8798	Gross Are	13779	FinArea	10338

SUB AREA DETAIL

Sub Area	% Usbl	Descrip	% Type	Qu	# Ten
BMT	100	FLA	35	A	

IMAGE

AssessPro Patriot Properties, Inc

MOBILE HOME

Make:		Model:		Serial #:		Year:		Color:	

SPEC FEATURES/YARD ITEMS

PARCEL ID 038.0-0001-0002.0

Code	Description	A	Y/S	Qty	Size/Dim	Qual	Con	Year	Unit Price	D/S	Dep	LUC	Fact	NB Fa	Appr Value	JCod	JFact	Juris. Value

Sample output to test PDF Combine only

More:	N	Total Yard Items:		Total Special Featues:		Total:	

038.0	0001	0002.0	3 of 6	Apartment
Map	Block	Lot	CARD	ARLINGTON

	Total Card /	Total Parcel
APPRAISED:	1,493,300 /	17,372,400
USE VALUE:	1,493,300 /	17,372,400
ASSESSED:	1,493,300 /	17,372,400

PROPERTY LOCATION

No	Alt No	Direction/Street/City
127	-133	BROADWAY, ARLINGTON

OWNERSHIP

Unit #:

Owner 1:	CONSERVATION FOOD & HEALTH
Owner 2:	FOUNDATION INC
Owner 3:	
Street 1:	466B TRAPELO ROAD
Street 2:	
Twn/City:	BELMONT
St/Prov:	MA Cntry: Own Occ: N
Postal:	02478 Type:

PREVIOUS OWNER

Owner 1:	
Owner 2:	
Street 1:	
Twn/City:	
St/Prov:	Cntry:
Postal:	

NARRATIVE DESCRIPTION

This parcel contains 230,580 Sq. Ft. of land mainly classified as Apts. 8 Plus with a Apt- Garden Building built about 1955, having primarily Brick Exterior and 11772 Square Feet, with 16 Units, 16 Baths, 0 3/4 Bath, 0 HalfBath, 56 Rooms, and 24 Bdrms.

OTHER ASSESSMENTS

Code	Descrip/No	Amount	Com. Int

PROPERTY FACTORS

Item	Code	Description	%	Item	Code	Description
Z	R5	APTS LOW	100	water		
o				Sewer		
n				Electri		
Census:				Exmpt		
Flood Haz:						
D				Topo		
s				Street		
t				Gas:		

IN PROCESS APPRAISAL SUMMARY

Use Code	Land Size	Building Value	Yard Items	Land Value	Total Value
112	0.000	1,493,300			1,493,300
Total Card	0.000	1,493,300			1,493,300
Total Parcel	5.293	10,309,700	44,700	7,018,000	17,372,400

Source: Market Adj Cost | Total Value per SQ unit /Card: 126.85 | /Parcel: 207.0

Legal Description

User Acct
25289
GIS Ref
GIS Ref
Insp Date
02/24/09

Entered Lot Size	
Total Land:	
Land Unit Type:	

PREVIOUS ASSESSMENT

Parcel ID 038.0-0001-0002.0

!3149!

Tax Yr	Use	Cat	Bldg Value	Yrd Items	Land Size	Land Value	Total Value	Asses'd Value	Notes	Date

PRINT

Date	Time
12/10/20	18:27:37

LAST REV

Date	Time
11/30/18	14:01:11
apro	

SALES INFORMATION

TAX DISTRICT

PAT ACCT. 3149

Grantor	Legal Ref	Type	Date	Sale Code	Sale Price	V	Tst	Verif	Notes

USER DEFINED

Prior Id # 1:	25289
Prior Id # 2:	
Prior Id # 3:	
Prior Id # 1:	
Prior Id # 2:	
Prior Id # 3:	
Prior Id # 1:	
Prior Id # 2:	
Prior Id # 3:	
ASR Map:	
Fact Dist:	
Reval Dist:	
Year:	
LandReason:	
BldReason:	
CivilDistrict:	
Ratio:	

BUILDING PERMITS

Date	Number	Descrip	Amount	C/O	Last Visit	Fed Code	F. Descrip	Comment

ACTIVITY INFORMATION

Date	Result	By	Name
2/24/2009	Measured	197	PATRIOT
4/19/2000	Info At Door	197	PATRIOT

Sign: VERIFICATION OF VISIT NOT DATA ___/___/___

LAND SECTION (First 7 lines only)

Use Code	Description	LUC Fact	No of Units	Depth / PriceUnits	Unit Type	Land Type	LT Factor	Base Value	Unit Price	Adj	Neigh	Neigh Influ	Neigh Mod	Infl 1	%	Infl 2	%	Infl 3	%	Appraised Value	Alt Class	%	Spec Land	J Code	Fact	Use Value	Notes
112	Apts. 8 Plus		0		Sq. Ft.	Site		0	0.	0.00	AA																

Total AC/HA: 0.00000 | Total SF/SM: 0 | Parcel LUC: 112 | Apts. 8 Plus | Prime NB Desc: APT AVG | Total: | Spl Credit | Total:

Sample output to test PDF Combine only

EXTERIOR INFORMATION

Type:	83 - Apt- Garden		
Sty Ht:	2 - 2 Story		
(Liv) Units:	16	Total:	116
Foundation:	1 - Concrete		
Frame:	1 - Wood		
Prime Wall:	7 - Brick		
Sec Wall:			%
Roof Struct:	2 - Hip		
Roof Cover:	1 - Asphalt Shgl		
Color:	BRICK		
View / Desir:			

GENERAL INFORMATION

Grade:	C - Average		
Year Blt:	1955	Eff Yr Blt:	
Alt LUC:		Alt %:	
Jurisdict:		Fact:	.
Const Mod:			
Lump Sum Adj:			

INTERIOR INFORMATION

Avg Ht/FL:	STD		
Prim Int Wall	2 - Plaster		
Sec Int Wall:			%
Partition:	T - Typical		
Prim Floors:	4 - Carpet		
Sec Floors:			%
Bsmnt Flr:	12 - Concrete		
Subfloor:			
Bsmnt Gar:			
Electric:	3 - Typical		
Insulation:	2 - Typical		
Int vs Ext:	S		
Heat Fuel:	1 - Oil		
Heat Type:	3 - Forced H/W		
# Heat Sys:	1		
% Heated:	100	% AC:	
Solar HW:	NO	Central Vac:	NO
% Com Wall		% Sprinkled:	

BATH FEATURES

Full Bath	16	Rating:	Average
A Bath:		Rating:	
3/4 Bath:		Rating:	
A 3QBth		Rating:	
1/2 Bath:		Rating:	
A HBth:		Rating:	
OthrFix:		Rating:	

OTHER FEATURES

Kits:	16	Rating:	Average
A Kits:		Rating:	
Frpl:		Rating:	
WSFlue:		Rating:	

CONDO INFORMATION

Location:	
Total Units:	
Floor:	
% Own:	
Name:	

DEPRECIATION

Phys Cond:	AV - Average	30.	%
Functional:			%
Economic:			%
Special:			%
Override:			%
	Total:	30	%

CALC SUMMARY

Basic $ / SQ:	168.00
Size Adj.:	0.81855249
Const Adj.:	1.04989493
Adj $ / SQ:	144.378
Other Features:	160000
Grade Factor:	1.00
NBHD Inf:	1.00000000
NBHD Mod:	
LUC Factor:	1.00
Adj Total:	2133317
Depreciation:	639995
Depreciated Total:	1493322

COMMENTS

5,7,9,11.

RESIDENTIAL GRID

1st Res Grid	Desc:	Line 1	# Units:	8

Level	FY	LR	DR	D	K	FR	RR	BR	FB	HB	L	O
Other												
Upper												
Lvl 2												
Lvl 1												
Lower												
Totals	RMs:	56	BRs:	24	Baths:	16	HB					

REMODELING

Exterior:	
Interior:	
Additions:	
Kitchen:	
Baths:	
Plumbing:	
Electric:	
Heating:	
General:	

RES BREAKDOWN

No Unit	RMS	BRS	FL
8	4	2	M
8	3	1	M
Totals			
16	56	24	

COMPARABLE SALES

Rate	Parcel ID	Typ	Date	Sale Price

WtAv$/SQ:		AvRate:	Ind.Val

Juris. Factor:	1.00	Before Depr:	144.38
Special Features:	0	Val/Su Net:	81.01
Final Total:	1493300	Val/Su SzAd	126.85

SKETCH

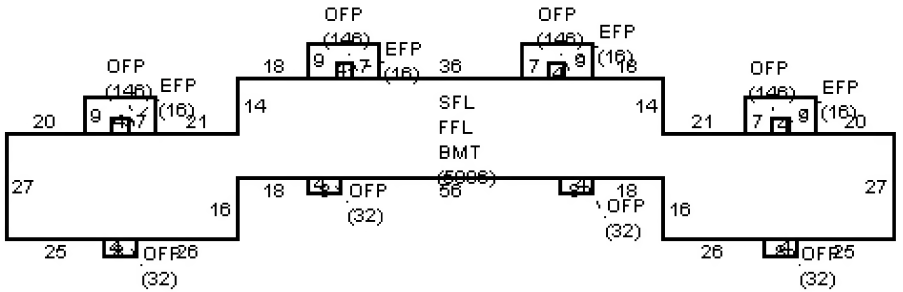

25

SUB AREA

Code	Description	Area - SQ	Rate - AV	Undepr Value
BMT	Basement	5,886	43.310	254,943
FFL	First Floor	5,886	144.380	849,810
SFL	Second Floor	5,886	144.380	849,810
OFP	Open Porch	712	19.760	14,066
EFP	Enclos Porch	64	73.240	4,688

Net Sketched Area:	18,434			Total:	1,973,317
Size Ad	11772	Gross Are	18434	FinArea	11772

SUB AREA DETAIL

Sub Area	% Usbl	Descrip	% Type	Qu	# Ten

IMAGE

AssessPro Patriot Properties, Inc

MOBILE HOME

Make:		Model:		Serial #:		Year:		Color:	

SPEC FEATURES/YARD ITEMS

PARCEL ID 038.0-0001-0002.0

Code	Description	A	Y/S	Qty	Size/Dim	Qual	Con	Year	Unit Price	D/S	Dep	LUC	Fact	NB Fa	Appr Value	JCod	JFact	Juris. Value

Sample output to test PDF Combine only

More:	N	Total Yard Items:		Total Special Featues:		Total:	

	Total Card /	Total Parcel
APPRAISED:	2,135,500 /	17,372,400
USE VALUE:	2,135,500 /	17,372,400
ASSESSED:	2,135,500 /	17,372,400

PROPERTY LOCATION

No	Alt No	Direction/Street/City
127	-133	BROADWAY, ARLINGTON

OWNERSHIP

Unit #:

Owner 1:	CONSERVATION FOOD & HEALTH
Owner 2:	FOUNDATION INC
Owner 3:	
Street 1:	466B TRAPELO ROAD
Street 2:	
Twn/City:	BELMONT
St/Prov:	MA Cntry: Own Occ: N
Postal:	02478 Type:

PREVIOUS OWNER

Owner 1:	
Owner 2:	
Street 1:	
Twn/City:	
St/Prov:	Cntry:
Postal:	

NARRATIVE DESCRIPTION

This parcel contains 230,580 Sq. Ft. of land mainly classified as Apts. 8 Plus with a Apt- Garden Building built about 1955, having primarily Brick Exterior and 17426 Square Feet, with 24 Units, 24 Baths, 0 3/4 Bath, 0 HalfBath, 84 Rooms, and 36 Bdrms.

OTHER ASSESSMENTS

Code	Descrip/No	Amount	Com. Int

PROPERTY FACTORS

Item	Code	Description	%	Item	Code	Description
Z	R5	APTS LOW	100	water		
o				Sewer		
n				Electri		
Census:				Exmpt		
Flood Haz:						
D				Topo		
s				Street		
t				Gas:		

IN PROCESS APPRAISAL SUMMARY

Use Code	Land Size	Building Value	Yard Items	Land Value	Total Value
112	0.000	2,135,500			2,135,500
Total Card	0.000	2,135,500			2,135,500
Total Parcel	5.293	10,309,700	44,700	7,018,000	17,372,400

Source: Market Adj Cost | Total Value per SQ unit /Card: 122.55 | /Parcel: 207.0

Legal Description

Entered Lot Size	
Total Land:	
Land Unit Type:	

User Acct	25289
GIS Ref	
GIS Ref	
Insp Date	02/24/09

PREVIOUS ASSESSMENT

Parcel ID 038.0-0001-0002.0

!3149!

Tax Yr	Use	Cat	Bldg Value	Yrd Items	Land Size	Land Value	Total Value	Asses'd Value	Notes	Date

PRINT

Date	Time
12/10/20	18:27:40

LAST REV

Date	Time
11/30/18	14:00:48
apro	

SALES INFORMATION

TAX DISTRICT

PAT ACCT. 3149

Grantor	Legal Ref	Type	Date	Sale Code	Sale Price	V	Tst	Verif	Notes

USER DEFINED

Prior Id # 1:	25289
Prior Id # 2:	
Prior Id # 3:	
Prior Id # 1:	
Prior Id # 2:	
Prior Id # 3:	
Prior Id # 1:	
Prior Id # 2:	
Prior Id # 3:	
ASR Map:	
Fact Dist:	
Reval Dist:	
Year:	
LandReason:	
BldReason:	
CivilDistrict:	
Ratio:	

BUILDING PERMITS

Date	Number	Descrip	Amount	C/O	Last Visit	Fed Code	F. Descrip	Comment

ACTIVITY INFORMATION

Date	Result	By	Name
2/24/2009	Measured	197	PATRIOT
4/19/2000	Info At Door	197	PATRIOT

Sign: VERIFICATION OF VISIT NOT DATA ___/___/___

LAND SECTION (First 7 lines only)

Use Code	Description	LUC Fact	No of Units	Depth / PriceUnits	Unit Type	Land Type	LT Factor	Base Value	Unit Price	Adj	Neigh	Neigh Influ	Neigh Mod	Infl 1	%	Infl 2	%	Infl 3	%	Appraised Value	Alt Class	%	Spec Land	J Code	Fact	Use Value	Notes
112	Apts. 8 Plus		0		Sq. Ft.	Site		0	0.	0.00	AA																

Total AC/HA: 0.00000 | Total SF/SM: 0 | Parcel LUC: 112 | Apts. 8 Plus | Prime NB Desc: APT AVG | Total: | Spl Credit | Total:

Sample output to test PDF Combine only

EXTERIOR INFORMATION

Type:	83 - Apt- Garden		
Sty Ht:	2 - 2 Story		
(Liv) Units:	24	Total:	116
Foundation:	1 - Concrete		
Frame:	1 - Wood		
Prime Wall:	7 - Brick		
Sec Wall:	2 - Clapboard	5	%
Roof Struct:	2 - Hip		
Roof Cover:	1 - Asphalt Shgl		
Color:	BRICK		
View / Desir:			

BATH FEATURES

Full Bath	24	Rating:	Average
A Bath:		Rating:	
3/4 Bath:		Rating:	
A 3QBth		Rating:	
1/2 Bath:		Rating:	
A HBth:		Rating:	
OthrFix:		Rating:	

OTHER FEATURES

Kits:	24	Rating:	Average
A Kits:		Rating:	
Frpl:		Rating:	
WSFlue:		Rating:	

COMMENTS

12,14,16,18,19,20.

RESIDENTIAL GRID

1st Res Grid	Desc:	Line 1	# Units:	1

Level	FY	LR	DR	D	K	FR	RR	BR	FB	HB	L	O
Other												
Upper												
Lvl 2												
Lvl 1												
Lower												
Totals	RMs:	84	BRs:	36	Baths:	24	HB					

SKETCH

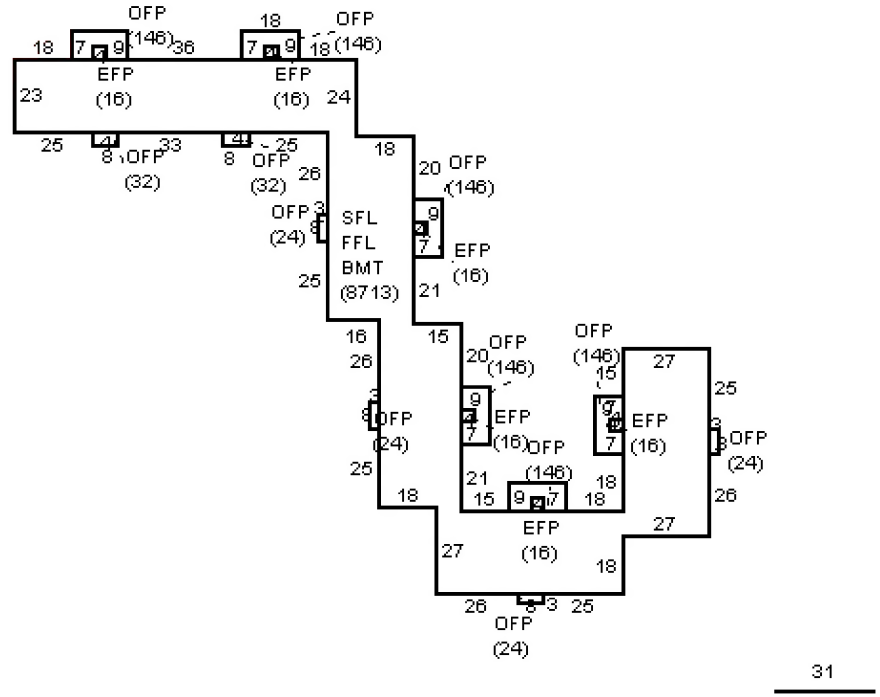

GENERAL INFORMATION

Grade:	C - Average		
Year Blt:	1955	Eff Yr Blt:	
Alt LUC:		Alt %:	
Jurisdict:		Fact:	.
Const Mod:			
Lump Sum Adj:			

CONDO INFORMATION

Location:	
Total Units:	
Floor:	
% Own:	
Name:	

REMODELING

Exterior:	
Interior:	
Additions:	
Kitchen:	
Baths:	
Plumbing:	
Electric:	
Heating:	
General:	

RES BREAKDOWN

No Unit	RMS	BRS	FL
12	4	2	M
12	3	1	M
Totals			
24	84	36	

INTERIOR INFORMATION

Avg Ht/FL:	STD		
Prim Int Wall	2 - Plaster		
Sec Int Wall:			%
Partition:	T - Typical		
Prim Floors:	4 - Carpet		
Sec Floors:			%
Bsmnt Flr:	12 - Concrete		
Subfloor:			
Bsmnt Gar:			
Electric:	3 - Typical		
Insulation:	2 - Typical		
Int vs Ext:	S		
Heat Fuel:	1 - Oil		
Heat Type:	3 - Forced H/W		
# Heat Sys:	1		
% Heated:	1	% AC:	
Solar HW:	NO	Central Vac:	NO
% Com Wall		% Sprinkled:	

DEPRECIATION

Phys Cond:	AV - Average	30.	%
Functional:			%
Economic:			%
Special:			%
Override:			%
	Total:	30	%

CALC SUMMARY

Basic $ / SQ:	168.00
Size Adj.:	0.80000001
Const Adj.:	1.04739511
Adj $ / SQ:	140.770
Other Features:	204507
Grade Factor:	1.00
NBHD Inf:	1.00000000
NBHD Mod:	
LUC Factor:	1.00
Adj Total:	3050743
Depreciation:	915223
Depreciated Total:	2135520

COMPARABLE SALES

Rate	Parcel ID	Typ	Date	Sale Price

WtAv$/SQ:		AvRate:		Ind.Val	

Juris. Factor:	1.00	Before Depr:	140.77
Special Features:	0	Val/Su Net:	78.31
Final Total:	2135500	Val/Su SzAd	122.55

SUB AREA

Code	Description	Area - SQ	Rate - AV	Undepr Value
BMT	Basement	8,713	42.230	367,958
FFL	First Floor	8,713	140.770	1,226,528
SFL	Second Floor	8,713	140.770	1,226,528
OFP	Open Porch	1,036	18.950	19,632
EFP	Enclos Porch	96	58.220	5,589

Net Sketched Area:	27,271			Total:	2,846,235
Size Ad	17426	Gross Are	27271	FinArea	17426

SUB AREA DETAIL

Sub Area	% Usbl	Descrip	% Type	Qu	# Ten

MOBILE HOME

Make:		Model:		Serial #:		Year:		Color:	

IMAGE

AssessPro Patriot Properties, Inc

SPEC FEATURES/YARD ITEMS

PARCEL ID

038.0-0001-0002.0

Code	Description	A	Y/S	Qty	Size/Dim	Qual	Con	Year	Unit Price	D/S	Dep	LUC	Fact	NB Fa	Appr Value	JCod	JFact	Juris. Value

Sample output to test PDF Combine only

More:	N	Total Yard Items:		Total Special Featues:		Total:	

	Total Card /	Total Parcel
APPRAISED:	1,704,800 /	17,372,400
USE VALUE:	1,704,800 /	17,372,400
ASSESSED:	1,704,800 /	17,372,400

PROPERTY LOCATION

No	Alt No	Direction/Street/City
127	-133	BROADWAY, ARLINGTON

OWNERSHIP

Unit #:

Owner 1:	CONSERVATION FOOD & HEALTH
Owner 2:	FOUNDATION INC
Owner 3:	
Street 1:	466B TRAPELO ROAD
Street 2:	
Twn/City:	BELMONT
St/Prov:	MA Cntry: Own Occ: N
Postal:	02478 Type:

PREVIOUS OWNER

Owner 1:	
Owner 2:	
Street 1:	
Twn/City:	
St/Prov:	Cntry:
Postal:	

NARRATIVE DESCRIPTION

This parcel contains 230,580 Sq. Ft. of land mainly classified as Apts. 8 Plus with a Apt- Garden Building built about 1955, having primarily Brick Exterior and 13638 Square Feet, with 20 Units, 20 Baths, 0 3/4 Bath, 0 HalfBath, 70 Rooms, and 30 Bdrms.

OTHER ASSESSMENTS

Code	Descrip/No	Amount	Com. Int

PROPERTY FACTORS

Item	Code	Description	%	Item	Code	Description
Z	R5	APTS LOW	100	water		
o				Sewer		
n				Electri		
Census:				Exmpt		
Flood Haz:						
D				Topo		
s				Street		
t				Gas:		

IN PROCESS APPRAISAL SUMMARY

Use Code	Land Size	Building Value	Yard Items	Land Value	Total Value
112	0.000	1,704,800			1,704,800
Total Card	0.000	1,704,800			1,704,800
Total Parcel	5.293	10,309,700	44,700	7,018,000	17,372,400

Source: Market Adj Cost | Total Value per SQ unit /Card: 125.00 | /Parcel: 207.0

Legal Description

Entered Lot Size	
Total Land:	
Land Unit Type:	

User Acct	25289
GIS Ref	
GIS Ref	
Insp Date	02/24/09

Patriot Properties Inc.

PREVIOUS ASSESSMENT

Parcel ID 038.0-0001-0002.0

!3149!

Tax Yr	Use	Cat	Bldg Value	Yrd Items	Land Size	Land Value	Total Value	Asses'd Value	Notes	Date

PRINT

Date	Time
12/10/20	18:27:43

LAST REV

Date	Time
11/30/18	14:00:08
apro	

USER DEFINED

Prior Id # 1:	25289
Prior Id # 2:	
Prior Id # 3:	
Prior Id # 1:	
Prior Id # 2:	
Prior Id # 3:	
Prior Id # 1:	
Prior Id # 2:	
Prior Id # 3:	
ASR Map:	
Fact Dist:	
Reval Dist:	
Year:	
LandReason:	
BldReason:	
CivilDistrict:	
Ratio:	

SALES INFORMATION

TAX DISTRICT

PAT ACCT. 3149

Grantor	Legal Ref	Type	Date	Sale Code	Sale Price	V	Tst	Verif	Notes

BUILDING PERMITS

Date	Number	Descrip	Amount	C/O	Last Visit	Fed Code	F. Descrip	Comment

ACTIVITY INFORMATION

Date	Result	By	Name
2/24/2009	Measured	197	PATRIOT
4/19/2000	Info At Door	197	PATRIOT

Sign: VERIFICATION OF VISIT NOT DATA ___/___/___

LAND SECTION (First 7 lines only)

Use Code	Description	LUC Fact	No of Units	Depth / PriceUnits	Unit Type	Land Type	LT Factor	Base Value	Unit Price	Adj	Neigh	Neigh Influ	Neigh Mod	Infl 1	%	Infl 2	%	Infl 3	%	Appraised Value	Alt Class	%	Spec Land	J Code	Fact	Use Value	Notes
112	Apts. 8 Plus		0		Sq. Ft.	Site		0	0.	0.00	AA																

Total AC/HA: 0.00000 | Total SF/SM: 0 | Parcel LUC: 112 | Apts. 8 Plus | Prime NB Desc: APT AVG | Total: | Spl Credit | Total:

Sample output to test PDF Combine only

EXTERIOR INFORMATION

Type:	83 - Apt- Garden		
Sty Ht:	2 - 2 Story		
(Liv) Units:	20	Total:	116
Foundation:	1 - Concrete		
Frame:	1 - Wood		
Prime Wall:	7 - Brick		
Sec Wall:			%
Roof Struct:	2 - Hip		
Roof Cover:	1 - Asphalt Shgl		
Color:	BRICK		
View / Desir:			

BATH FEATURES

Full Bath	20	Rating:	Average
A Bath:		Rating:	
3/4 Bath:		Rating:	
A 3QBth		Rating:	
1/2 Bath:		Rating:	
A HBth:		Rating:	
OthrFix:		Rating:	

OTHER FEATURES

Kits:	20	Rating:	Average
A Kits:		Rating:	
Frpl:		Rating:	
WSFlue:		Rating:	

COMMENTS

4,6,8,10,138.

RESIDENTIAL GRID

1st Res Grid	Desc:	Line 1	# Units:	1

Level	FY	LR	DR	D	K	FR	RR	BR	FB	HB	L	O
Other												
Upper												
Lvl 2												
Lvl 1												
Lower												
Totals	RMs:	70	BRs:	30	Baths:	20	HB					

SKETCH

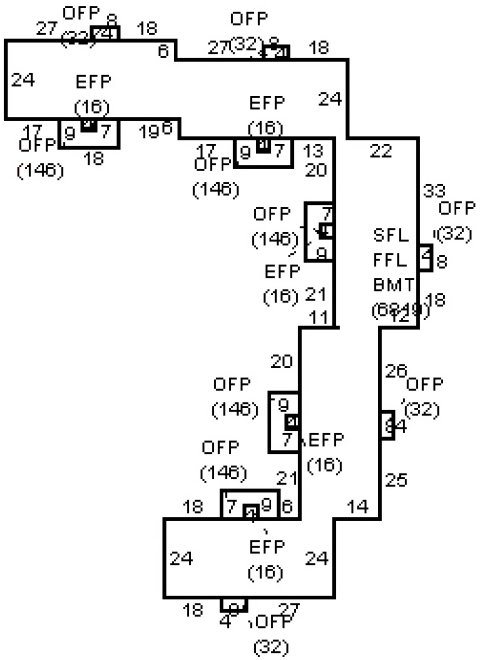

GENERAL INFORMATION

Grade:	C - Average		
Year Blt:	1955	Eff Yr Blt:	
Alt LUC:		Alt %:	
Jurisdict:		Fact:	.
Const Mod:			
Lump Sum Adj:			

CONDO INFORMATION

Location:	
Total Units:	
Floor:	
% Own:	
Name:	

REMODELING

Exterior:	
Interior:	
Additions:	
Kitchen:	
Baths:	
Plumbing:	
Electric:	
Heating:	
General:	

RES BREAKDOWN

No Unit	RMS	BRS	FL
10	4	2	M
10	3	1	M
Totals			
20	70	30	

INTERIOR INFORMATION

Avg Ht/FL:	STD		
Prim Int Wall	2 - Plaster		
Sec Int Wall:			%
Partition:	T - Typical		
Prim Floors:	4 - Carpet		
Sec Floors:			%
Bsmnt Flr:	12 - Concrete		
Subfloor:			
Bsmnt Gar:			
Electric:	3 - Typical		
Insulation:	2 - Typical		
Int vs Ext:	S		
Heat Fuel:	1 - Oil		
Heat Type:	3 - Forced H/W		
# Heat Sys:	1		
% Heated:	100	% AC:	
Solar HW:	NO	Central Vac:	NO
% Com Wall		% Sprinkled:	

DEPRECIATION

Phys Cond:	AV - Average	30.	%
Functional:			%
Economic:			%
Special:			%
Override:			%
	Total:	30	%

CALC SUMMARY

Basic $ / SQ:	168.00
Size Adj.:	0.80000001
Const Adj.:	1.04989493
Adj $ / SQ:	141.106
Other Features:	200000
Grade Factor:	1.00
NBHD Inf:	1.00000000
NBHD Mod:	
LUC Factor:	1.00
Adj Total:	2435359
Depreciation:	730608
Depreciated Total:	1704751

COMPARABLE SALES

Rate	Parcel ID	Typ	Date	Sale Price

WtAv$/SQ:		AvRate:	Ind.Val

Juris. Factor:	1.00	Before Depr:	141.11
Special Features:	0	Val/Su Net:	79.56
Final Total:	1704800	Val/Su SzAd	125.00

SUB AREA

Code	Description	Area - SQ	Rate - AV	Undepr Value
BMT	Basement	6,819	42.330	288,660
FFL	First Floor	6,819	141.110	962,201
SFL	Second Floor	6,819	141.110	962,201
OFP	Open Porch	890	19.270	17,150
EFP	Enclos Porch	80	64.310	5,145

Net Sketched Area:	21,427			Total:	2,235,357
Size Ad	13638	Gross Are	21427	FinArea	13638

SUB AREA DETAIL

Sub Area	% Usbl	Descrip	% Type	Qu	# Ten

MOBILE HOME

Make:		Model:		Serial #:		Year:	Color:

IMAGE

AssessPro Patriot Properties, Inc

SPEC FEATURES/YARD ITEMS

PARCEL ID 038.0-0001-0002.0

Code	Description	A	Y/S	Qty	Size/Dim	Qual	Con	Year	Unit Price	D/S	Dep	LUC	Fact	NB Fa	Appr Value	JCod	JFact	Juris. Value

Sample output to test PDF Combine only

More:	N	Total Yard Items:		Total Special Featues:		Total:	

Apartment
ARLINGTON

	Total Card /	Total Parcel
APPRAISED:	2,017,800 /	17,372,400
USE VALUE:	2,017,800 /	17,372,400
ASSESSED:	2,017,800 /	17,372,400

PROPERTY LOCATION

No	Alt No	Direction/Street/City
127	-133	BROADWAY, ARLINGTON

OWNERSHIP

Unit #:

Owner 1:	CONSERVATION FOOD & HEALTH
Owner 2:	FOUNDATION INC
Owner 3:	
Street 1:	466B TRAPELO ROAD
Street 2:	
Twn/City:	BELMONT
St/Prov:	MA Cntry: Own Occ: N
Postal:	02478 Type:

PREVIOUS OWNER

Owner 1:	
Owner 2:	
Street 1:	
Twn/City:	
St/Prov:	Cntry:
Postal:	

NARRATIVE DESCRIPTION

This parcel contains 230,580 Sq. Ft. of land mainly classified as Apts. 8 Plus with a Apt- Garden Building built about 1955, having primarily Brick Exterior and 16168 Square Feet, with 24 Units, 24 Baths, 0 3/4 Bath, 0 HalfBath, 84 Rooms, and 36 Bdrms.

OTHER ASSESSMENTS

Code	Descrip/No	Amount	Com. Int

PROPERTY FACTORS

Item	Code	Description	%	Item	Code	Description
Z	R5	APTS LOW	100	water		
o				Sewer		
n				Electri		
Census:				Exmpt		
Flood Haz:						
D				Topo		
s				Street		
t				Gas:		

IN PROCESS APPRAISAL SUMMARY

Use Code	Land Size	Building Value	Yard Items	Land Value	Total Value
112	0.000	2,017,800			2,017,800
Total Card	0.000	2,017,800			2,017,800
Total Parcel	5.293	10,309,700	44,700	7,018,000	17,372,400

Source: Market Adj Cost | Total Value per SQ unit /Card: 124.80 | /Parcel: 207.0

Legal Description

Entered Lot Size	
Total Land:	
Land Unit Type:	

User Acct	25289
GIS Ref	
GIS Ref	
Insp Date	02/24/09

Patriot Properties Inc.

PREVIOUS ASSESSMENT

Parcel ID 038.0-0001-0002.0

!3149!

Tax Yr	Use	Cat	Bldg Value	Yrd Items	Land Size	Land Value	Total Value	Asses'd Value	Notes	Date

PRINT

Date	Time
12/10/20	18:27:46

LAST REV

Date	Time
11/30/18	13:59:31
apro	

USER DEFINED

Prior Id # 1:	25289
Prior Id # 2:	
Prior Id # 3:	
Prior Id # 1:	
Prior Id # 2:	
Prior Id # 3:	
Prior Id # 1:	
Prior Id # 2:	
Prior Id # 3:	
ASR Map:	
Fact Dist:	
Reval Dist:	
Year:	
LandReason:	
BldReason:	
CivilDistrict:	
Ratio:	

SALES INFORMATION

TAX DISTRICT

PAT ACCT. 3149

Grantor	Legal Ref	Type	Date	Sale Code	Sale Price	V	Tst	Verif	Notes

BUILDING PERMITS

Date	Number	Descrip	Amount	C/O	Last Visit	Fed Code	F. Descrip	Comment

ACTIVITY INFORMATION

Date	Result	By	Name
2/24/2009	Measured	197	PATRIOT
4/19/2000	Info At Door	197	PATRIOT

Sign: VERIFICATION OF VISIT NOT DATA ___/___/___

LAND SECTION (First 7 lines only)

Use Code	Description	LUC Fact	No of Units	Depth / PriceUnits	Unit Type	Land Type	LT Factor	Base Value	Unit Price	Adj	Neigh	Neigh Influ	Neigh Mod	Infl 1	%	Infl 2	%	Infl 3	%	Appraised Value	Alt Class	%	Spec Land	J Code	Fact	Use Value	Notes
112	Apts. 8 Plus		0		Sq. Ft.	Site		0	0.	0.00	AA																

Total AC/HA: 0.00000 | Total SF/SM: 0 | Parcel LUC: 112 | Apts. 8 Plus | Prime NB Desc: APT AVG | Total: | Spl Credit | Total:

Sample output to test PDF Combine only

EXTERIOR INFORMATION

Type:	83 - Apt- Garden		
Sty Ht:	2 - 2 Story		
(Liv) Units:	24	Total:	116
Foundation:	1 - Concrete		
Frame:	1 - Wood		
Prime Wall:	7 - Brick		
Sec Wall:	4 - Vinyl	5	%
Roof Struct:	2 - Hip		
Roof Cover:	1 - Asphalt Shgl		
Color:	BRICK		
View / Desir:			

GENERAL INFORMATION

Grade:	C - Average		
Year Blt:	1955	Eff Yr Blt:	
Alt LUC:		Alt %:	
Jurisdict:		Fact:	.
Const Mod:			
Lump Sum Adj:			

INTERIOR INFORMATION

Avg Ht/FL:	STD		
Prim Int Wall	2 - Plaster		
Sec Int Wall:			%
Partition:	T - Typical		
Prim Floors:	4 - Carpet		
Sec Floors:			%
Bsmnt Flr:	12 - Concrete		
Subfloor:			
Bsmnt Gar:			
Electric:	3 - Typical		
Insulation:	2 - Typical		
Int vs Ext:	S		
Heat Fuel:	1 - Oil		
Heat Type:	3 - Forced H/W		
# Heat Sys:	1		
% Heated:	100	% AC:	
Solar HW:	NO	Central Vac:	NO
% Com Wall		% Sprinkled:	

BATH FEATURES

Full Bath	24	Rating:	Average
A Bath:		Rating:	
3/4 Bath:		Rating:	
A 3QBth		Rating:	
1/2 Bath:		Rating:	
A HBth:		Rating:	
OthrFix:		Rating:	

OTHER FEATURES

Kits:	24	Rating:	Average
A Kits:		Rating:	
Frpl:		Rating:	
WSFlue:		Rating:	

CONDO INFORMATION

Location:	
Total Units:	
Floor:	
% Own:	
Name:	

DEPRECIATION

Phys Cond:	AV - Average	30.	%
Functional:			%
Economic:			%
Special:			%
Override:			%
	Total:	30	%

CALC SUMMARY

Basic $ / SQ:	168.00
Size Adj.:	0.80000001
Const Adj.:	1.04739511
Adj $ / SQ:	140.770
Other Features:	240000
Grade Factor:	1.00
NBHD Inf:	1.00000000
NBHD Mod:	
LUC Factor:	1.00
Adj Total:	2882585
Depreciation:	864776
Depreciated Total:	2017810

COMMENTS

120,122,124,126,128,130.

RESIDENTIAL GRID

1st Res Grid	Desc:	Line 1	# Units:	1

Level	FY	LR	DR	D	K	FR	RR	BR	FB	HB	L	O
Other												
Upper												
Lvl 2												
Lvl 1												
Lower												
Totals	RMs:	84	BRs:	36	Baths:	24	HB					

REMODELING

Exterior:	
Interior:	
Additions:	
Kitchen:	2002
Baths:	
Plumbing:	
Electric:	
Heating:	
General:	

RES BREAKDOWN

No Unit	RMS	BRS	FL
12	4	2	M
12	3	1	M
Totals			
24	84	36	

COMPARABLE SALES

Rate	Parcel ID	Typ	Date	Sale Price

WtAv$/SQ:		AvRate:	Ind.Val

Juris. Factor:	1.00	Before Depr:	140.77
Special Features:	0	Val/Su Net:	79.49
Final Total:	2017800	Val/Su SzAd	124.80

SKETCH

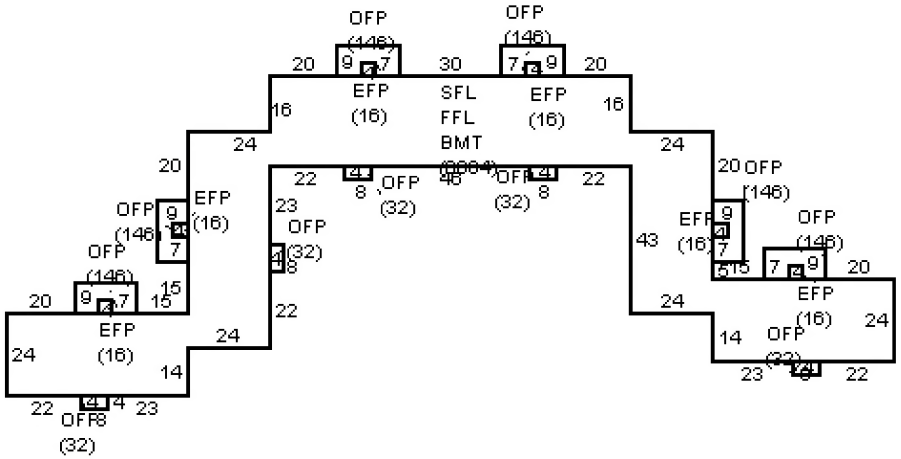

SUB AREA

Code	Description	Area - SQ	Rate - AV	Undepr Value
BMT	Basement	8,084	42.230	341,395
FFL	First Floor	8,084	140.770	1,137,984
SFL	Second Floor	8,084	140.770	1,137,984
OFP	Open Porch	1,036	18.950	19,632
EFP	Enclos Porch	96	58.220	5,589

Net Sketched Area:	25,384			Total:	2,642,584
Size Ad	16168	Gross Are	25384	FinArea	16168

SUB AREA DETAIL

Sub Area	% Usbl	Descrip	% Type	Qu	# Ten

IMAGE

AssessPro Patriot Properties, Inc

MOBILE HOME

Make:		Model:		Serial #:		Year:	Color:

SPEC FEATURES/YARD ITEMS

PARCEL ID 038.0-0001-0002.0

Code	Description	A	Y/S	Qty	Size/Dim	Qual	Con	Year	Unit Price	D/S	Dep	LUC	Fact	NB Fa	Appr Value	JCod	JFact	Juris. Value

Sample output to test PDF Combine only

More:	N	Total Yard Items:		Total Special Featues:	Total: